CAUTION : Printed document is uncontrolled.

LEGEND:

- BEDDING MATERIAL
- TOPSOIL
- GENERAL FILL
- ENGINEERED FILL
- SUBGRADE

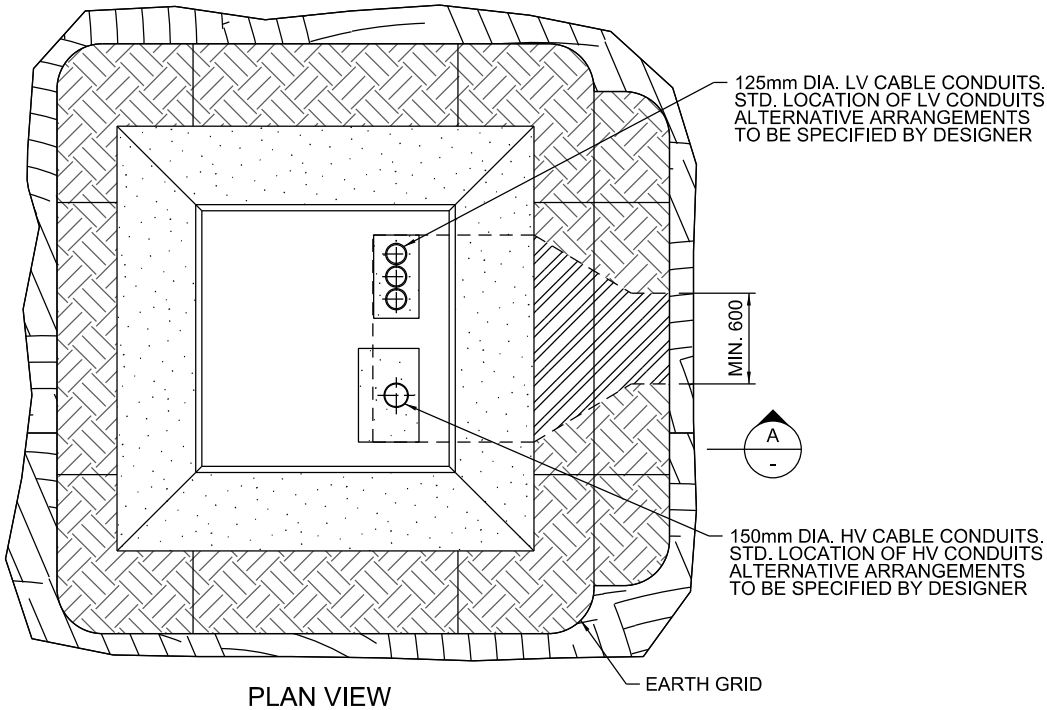

PLAN VIEW
SCALE 1:50

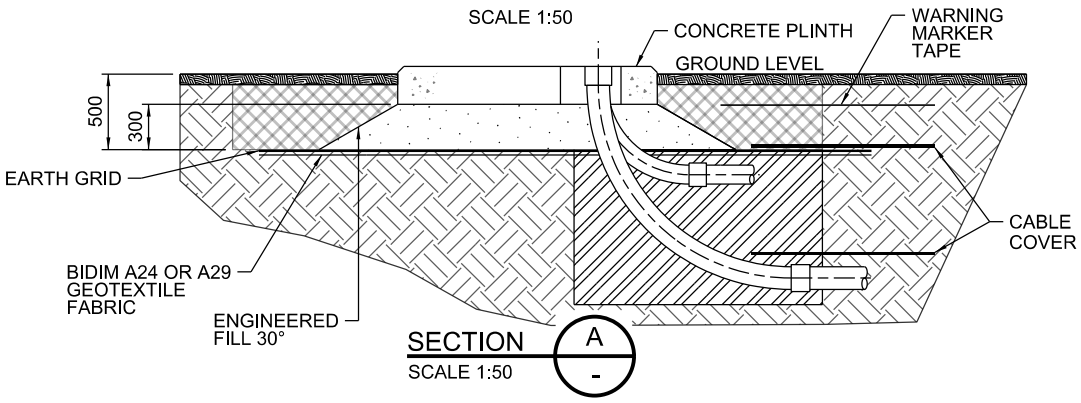

SECTION A - A
SCALE 1:50

NOTES

1. THESE DRAWINGS SHALL BE READ IN CONJUNCTION WITH THE SPECIFICATION, MECHANICAL, CIVIL AND RELEVANT ENGINEERING STANDARDS, DOCUMENTS AND WITH OTHER SUCH WRITTEN INSTRUCTIONS AS MAY BE ISSUED.
2. ALL EXCAVATION SHALL BE CARRIED OUT IN SUCH A MANNER AS TO PRESERVE UNDISTURBED CONDITIONS AT THE UNDERSIDE OF THE BEDDING AND ENGINEERED FILL.
3. FOLLOWING EXCAVATION, CONDUCT DCP TESTS AT THE CORNERS AND IN THE MIDDLE OF THE SLAB. DCP TESTS SHALL BE CONDUCTED IN ACCORDANCE WITH RELEVANT AUSTRALIAN STANDARDS AND ALL TEST VALUES RECORDED AS EVIDENCE OF COMPLIANCE.
4. THIS DESIGN IS ONLY SUITABLE WHERE SUBGRADE DCP IS GREATER THAN OR EQUAL TO 3. IF UNACHIEVABLE, A CERTIFIED DESIGN SHALL BE DEVELOPED.
5. BEDDING MATERIAL SHALL BE SAND (FREE OF GRAVEL/LARGER PARTICLES) PLACED AS CONTROLLED FILL & COMPACTED IN LAYERS LESS THAN 200mm THICK WITHIN A DEFINED MOISTURE RANGE BY SUITABLE EQUIPMENT. COMPACTION SHALL SATISFY THE REQUIREMENTS OF AS 2566.1 HAND TAMP, AND WATER SAND AROUND THE CONDUIT HAUNCHES AND TO 150mm ABOVE THE TOP OF THE CONDUIT. ABOVE THIS LEVEL PLACE SAND AS CONTROLLED FILL.
6. ENGINEERED FILL SHALL COMPLY WITH DEPARTMENT OF STATE GROWTH (DSG), ROADWORKS SPECIFICATION R40 (PAVEMENT BASE 'A').
7. COMPACTED ENGINEERING FILL SHALL BE PLACED AND COMPACTED IN 150MM MAXIMUM THICK LAYERS. IN ACCORDANCE WITH DSG SPECIFICATION R40.
8. MINOR IMPERFECTIONS IN THE SURFACE OF THE ENGINEERED FILL OF UP TO ±10 mm SHALL BE FILLED AND SCREENED WITH BEDDING SAND TO ACHIEVE A LEVEL SURFACE.
9. FOR PLINTH DETAILS REFER TO KS-327.
10. FOR EARTH GRID DETAILS REFER TO KS-330.
11. FOR CONDUIT DETAILS REFER TO KS-331.
12. UNDERGROUND TRENCH ARRANGEMENTS TO BE COMPLIANT WITH UNDERGROUND DESIGN STANDARD.
13. TRENCH WIDTH MUST ALLOW FOR A MINIMUM CLEARANCE OF 75mm EACH SIDE OF CABLE OR CONDUIT.

ALTERATIONS	
ORIGINAL ISSUE	
REVISED NOTES FOR HV&LV CONDUIT ARRANGEMENT	

REV B

TasNetworks

PROJECT C516011
DESIGNED BY C5 PRO-SOLUTIONS
DRAWN BY C5 PRO-SOLUTIONS
ENG.CHECK F.PONTES
DATE 26/06/2017
ENG.APPROV. G.HALL
DATE 04/AUG/17

TasNetworks

DRAWN	C5 PRO-SOLUTIONS
DESIGNED BY	TASNETWORKS
CHECKED BY	G.HALL
APPROVED BY	D.ELLIS
DATE APPROVED	05/02/2016

© Tasmanian Networks PTY. LTD. trading as TasNetworks
ABN: 24 167 357 299

NO PART OF THIS DRAWING MAY BE REPRODUCED, STORED IN A RETRIEVAL SYSTEM IN ANY FORM OR TRANSMITTED BY ANY MEANS WITHOUT THE PRIOR PERMISSION OF TASNETWORKS

TITLE
MINI KIOSK SUBSTATION
CIVIL FOUNDATION

SCALE 1:50

A4

KS-332

REVISION B

EMF/PDF CREATION DATE 04/AUG/17
BM DWG NO KS-332
BM REV B
DWG STATUS DESIGN